DUAL-FLEX MARINE & INDUSTRIAL
ENGINE VIBRATION ISOLATORS

DF-4400 SERIES

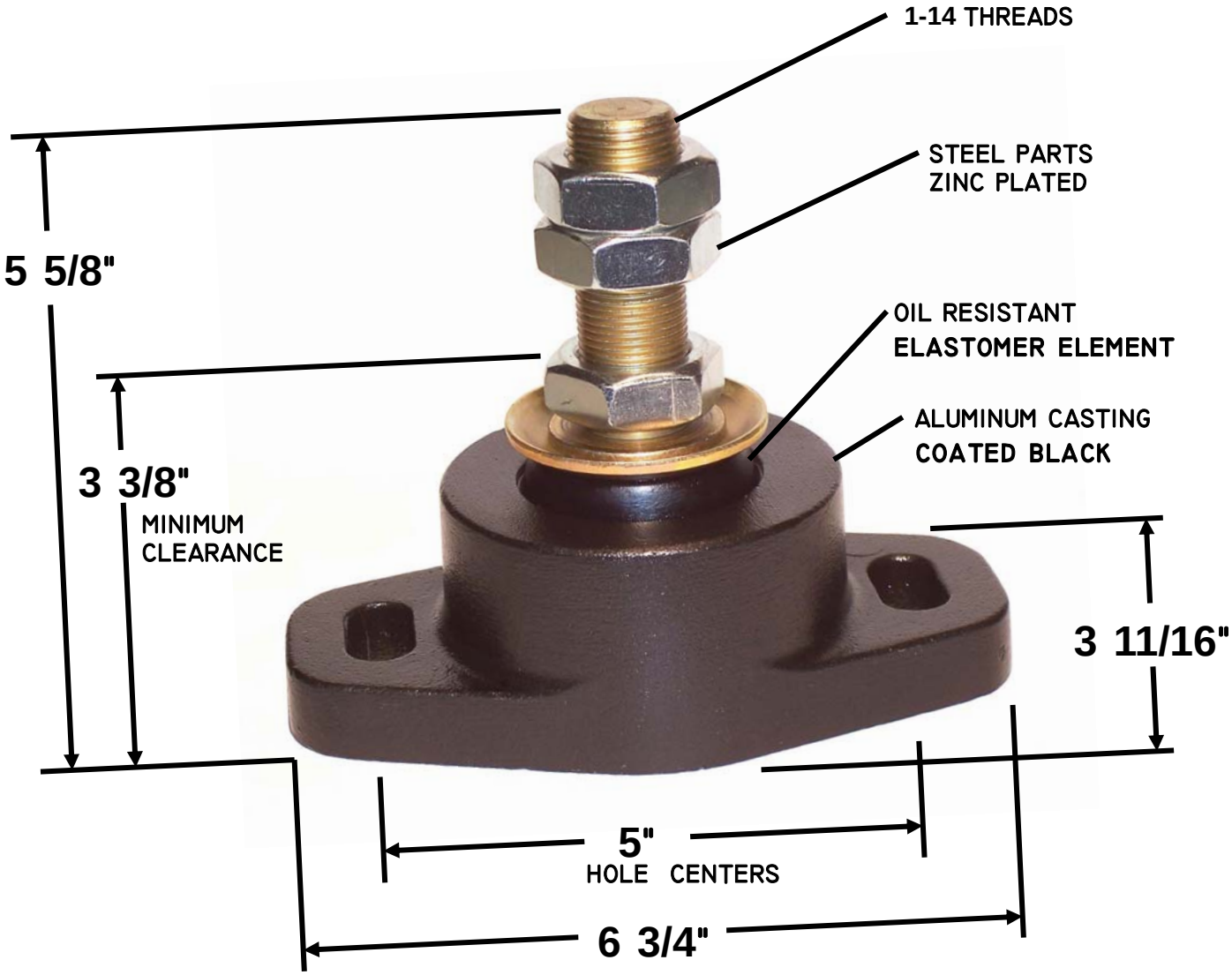

Manufactured in U.S.A.

DF-4400 SERIES

The ("Dual Flex") DF-4400 Series of heavy duty mountings is designed principally for diesel engines in the 1,400 - 2,800 lb. range. Base casting features heavy duty aluminum alloy construction, with lip incorporated in the top of the casting to resist the upward pull of the engine - coated black to resist corrosion. Durable oil and fuel resistant elastomer element. Low profile mount - requires only 3 3/8" minimum clearance from casting base to top of leveling nut. Fail safe design -

bottom pad prevents excessive impact. Easy installation with full 1" threaded stud for vertical height and slotted casting for horizontal adjustment. Mounts come complete - furnished with three nuts: leveling, locking and secondary lock. Aluminum base cast with 1/2" slotted mounting holes for 1/2" bolts or lag screws on 5" centers. All steel parts are Zinc plated for corrosion resistance. Available in four size ratings (shown below) dependant on engine/powertrain package weight.

SUGGESTED MOUNTINGS

ENGINE WEIGHTS	4 POINT MOUNTINGS
1,400 to 1,800 lbs.	DF-4405-4
1,800 to 2,200 lbs.	DF-4406-4
2,200 to 2,500 lbs.	DF-4407-4
2,500 to 2,800 lbs.	DF-4408-4

The Bushings, Inc. "Dual Flex" Marine Engine Mount design provides outstanding vibration isolation control across the three (longitudinal, lateral, and vertical) fields of vibratory motion. Construction of the mount gives a soft cushioning effect under normal loads, as mount loads increase across the operating range, shear resistance grows quickly providing smooth operation with a small amount of deflection.

BUSHINGS, INC.

1967 Rochester Industrial Drive
Rochester Hills, Michigan 48309-3340
Phone:(248)650-0603 Fax:(248)650-0606
www.bushingsinc.com

Bushings, Inc. Quality System
ISO 9001 Certified